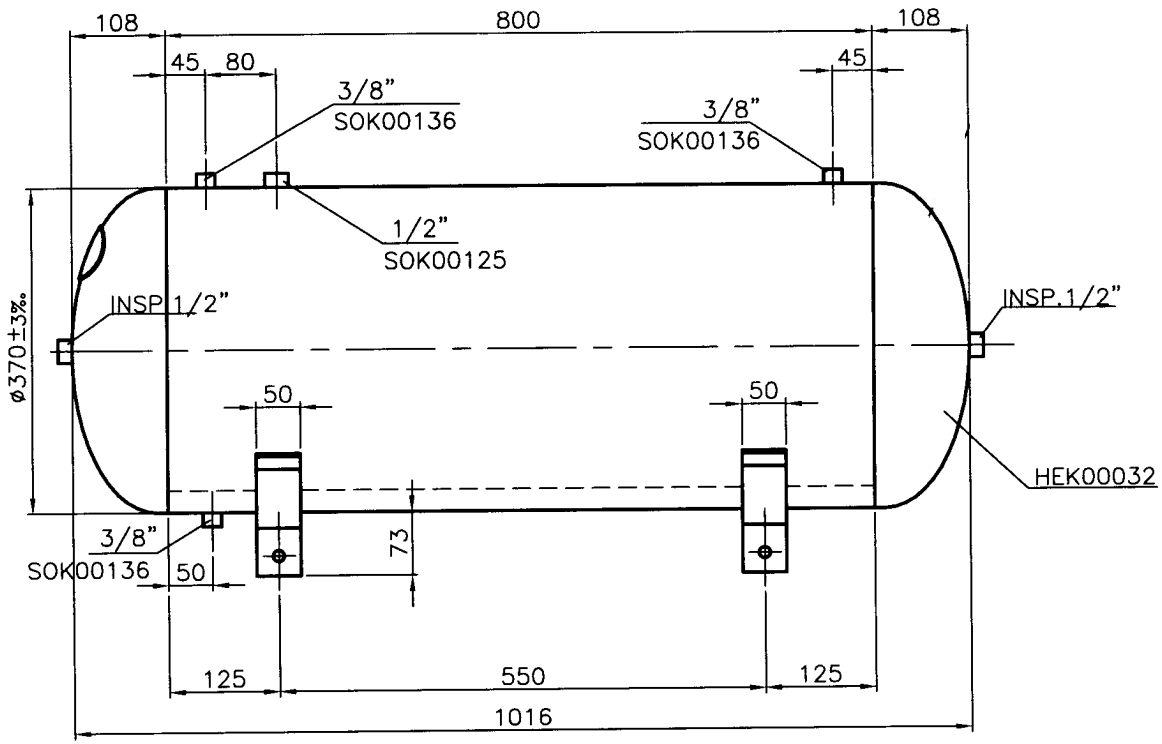

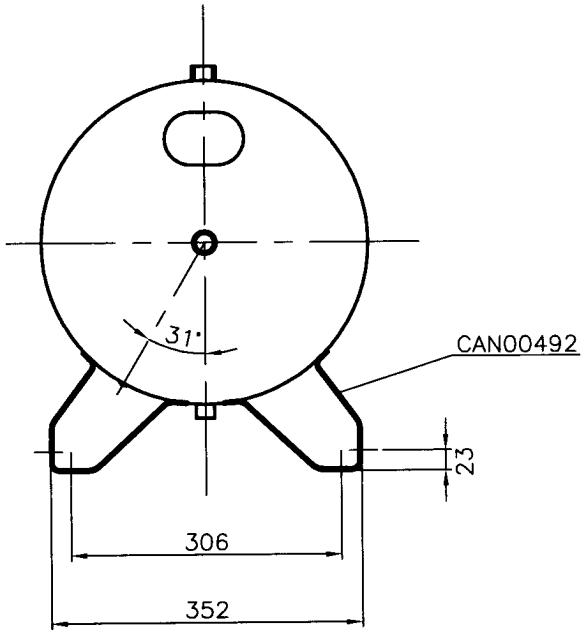

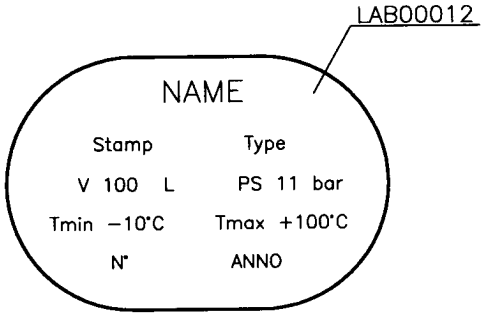

REV.	REASON OF REVISION	DATE	SIGN.

	PREPARED	APPROVED	REVIEWED
DATE	19/02/08	19/02/08	
SIGNATURE	S.DE MITRO		

REPLACE DRAWING

TOLERANCES,IF NOT INDICATED,ACCORDING TO:
C-G SE 03.03/3

SHEET A3
SCALE 1:6

SRL AIR COM

SERBATOIO LT 100 CE FISSO
-CSC-

DRAWING No.
VES01276
REV. 0